25 251 GL1 **ESSENCE FOUR-HOLE SINGLE-LEVER BATH COMBINATION**

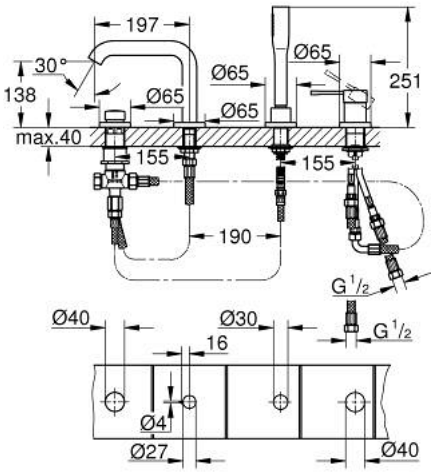

PRODUCT DESCRIPTION

- Tyc: cool sunrise
- GROHE SilkMove 35 mm ceramic cartridge
- with temperature limiter
- GROHE LongLife finish
- consisting of:
- pre-assembled spout fixing
- single lever mixer operating element
- metal lever
- bath inlet with mousseur
- diverter bath/shower
- metal stick hand shower
- metal shower hose 2000 mm (always chrome for any colour of the set)
- flexible connection hoses
- connection for shower hose
- protected against backflow
- for use with 29 037 000
- min. recommended pressure 1.0 bar
- professional exclusive