# 26 075 DL0 **EUPHORIA SYSTEM 310 SHOWER SYSTEM WITH THERMOSTATIC MIXER FOR WALL MOUNTING**

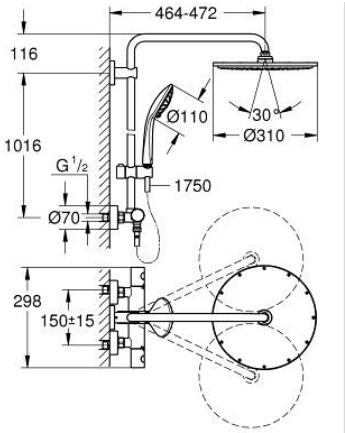


**PRODUCT DESCRIPTION**

- Tyc: brushed warm sunset
- consisting of:
- horizontal swivable 450 mm shower arm
- exposed thermostat with Aquadimmer function
- allows change between:
- Rainshower Cosmopolitan 310 metal head shower
- spray pattern: Rain
- maximum flow rate (at 3 bar): 13.5 l/min
- with ball joint
- rotation angle ± 15°
- hand shower Euphoria 110 Massage
- spray patterns: Rain, Massage, SmartRain
- maximum flow rate (at 3 bar): 11.5 l/min
- adjustable in height with gliding element
- shower hose Silverflex 1750 mm 1/2" x 1/2" (28 388)
- maximum flow rate system (at 3 bar): 13.5 l/min
- minimum flow rate 5 l/min
- GROHE TurboStat - compact cartridge with wax thermoelement
- GROHE SafeStop safety button at 38°C ( calibration required )
- GROHE SafeStop Plus - optional temperature limiter at 43°C included
- GROHE MetalGrip ergonomically shaped metal handles
- GROHE DreamSpray - perfect spray pattern
- GROHE LongLife finish
- GROHE SprayDimmer - stepless flow rate adjustment
- Inner WaterGuide - inner insulation for surface protection
- GROHE SpeedClean - effortless limescale removal
- TwistStop - to prevent hose from twisting
- suitable for instantaneous heaters from 18 kW/h
- optional upgrade: GROHE EasyReach tray (26 362), sold separately