34 863 AL0 **GROHTHERM SMARTCONTROL CONCEALED SHOWER SYSTEM WITH RAINSHOWER SMARTACTIVE 310**

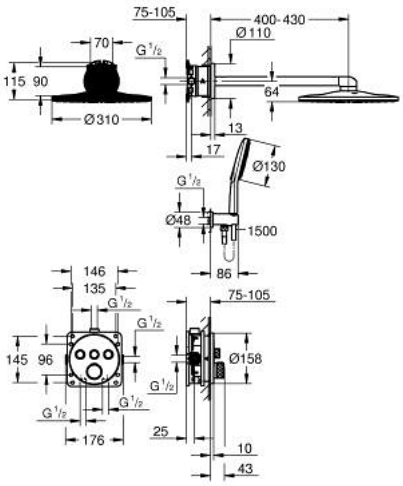

PRODUCT DESCRIPTION

- Colour: brushed hard graphite
- consisting of:
- concealed thermostat with 3 valves (29 121)
- GROHE Rapido SmartBox universal rough-in box, 1/2" (35 604)
- Rainshower SmartActive 310 head shower set 2 sprays (26 475) including horizontal shower arm 430 mm and head shower rough-in (26 483)
- Rainshower SmartActive 130 hand shower 3 sprays
- shower outlet elbow 1/2" with holder (26 658)
- Silverflex shower hose 1500 mm 1/2" x 1/2"
- optional flow regulator 9.5 l/min included for hand shower