39 818 000 **SOLIDO COMPACT 5-IN-1 SET FOR WC, 1.13 M INSTALLATION HEIGHT**

PRODUCT DESCRIPTION
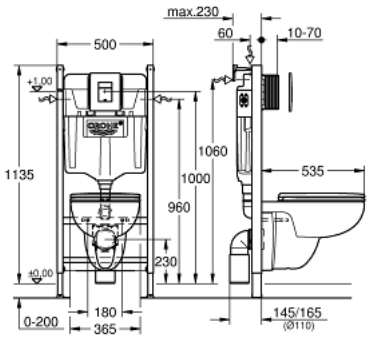
- Colour: chrome
- with flushing cistern GD 2
- class 1, full flush 5 l, according to EN997
- flushes with 3 l for small flush
- consisting of:
- Solido Compact element for WC (38 939 000)
- Even flush plate, chrome (38 966 000)
- Start Edge Ceramic wall hung WC set including seat and lid (39 815 000)
- wall brackets (38 558 00M)
- noise protection (37 131 000)